Work Order ID 51427

August 24, 2009 10:42:31 AM

Item ID: D2230-1 **Accept** **Setup Start** **Stop**

Revision ID: G

Item Name: Lug

Start Date: 24/08/2009 **Start Qty:** 200.00 **Cust Item ID:**

Required Date: 28/08/2009 **Req'd Qty:** 200.00 **Customer:**

Reference: 09.08.24

Run Start **Stop**

Approvals: **Process Plan:** _____ **Date:** _____ **Tooling:** _____ **Date:** _____

QC: _____ **Date:** _____ **SPC (Y/N):** _____ **Date:** _____

Sequence ID/ Work Center ID	Operation Description	Set Up/ Run Hours	Draw Number	Draw Rev.	Plan Code	Accept Qty	Reject Qty	Reject Number	Insp. Stamp
Draw Nbr / **Revision Nbr**									
D2230 / Rev G									
100	BAND SAW	0.00				200			
Bandsaw	**Memo**	0.00							
Jeaspa Bandsaw	Cut D2423 extrusion to 0.82" □Batch: 45800		mJ 09/08/26						
110	HAAS CNC VERTICAL MACHINING #1	0.00				200	16		PTO
HAAS 1	**Memo**	0.00							
HAAS CNC vertical machine #1	1-Machine per folio D2230-1□(Check for crack while loading into the machine.)□2-Tumble and deburr rough edges after tumbling		JL/mJ 09/08/31						
120	QC2- Inspect parts off machine FAI/FAIB	0.00				200			
QC	**Memo**	0.00	JL/mJ 09/08/31						
Quality Control									

Dart Aerospace Ltd

W/O:		WORK ORDER CHANGES					
DATE	STEP	PROCEDURE CHANGE	By	Date	Qty	Approval Chief Eng / Prod Mgr	Approval QC Inspector

Part No: D2230-1 PAR #: _____ Fault Category: Machined parts NCR: (Yes) No DQA: _____ Date: 05.09.09

Resolution: Scrap Disposition: Scrap. QA: N/C Closed: _____ Date: 05.05.09

NCR: 51427		WORK ORDER NON-CONFORMANCE (NCR)						
DATE	STEP	Description of NC Section A	Corrective Action Section B			Verification Section C	Approval Chief Eng	Approval QC Inspector
			Initial Chief Eng	Action Description Chief Eng	Sign & Date			
09/08/31	110	16 piece came out of machine with .750 measure to small on the width. Parts were either cut crooked a the Jaespa & lifted during operation R.C. process.	05/09/2	→ Scrap & Replace Qty 16 M45800 → Ensure cuts are good prior to use.	09/08/31	09/08/31	05/09/2	09.08.31

NOTE: Date & initial all entries

H:\fFORMS\Quality Assurance\approved QA\NCRWO RevE

Work Order ID 51427

August 24, 2009 10:42:31 AM

Item ID: D2230-1
Revision ID: G
Item Name: Lug

Accept

Setup Start
Stop

Start Date: 24/08/2009 **Start Qty:** 200.00
Required Date: 28/08/2009 **Req'd Qty:** 200.00
Reference:

Cust Item ID:
Customer:

Run Start
Stop

Approvals: **Process Plan:** _____ **Date:** _____ **Tooling:** _____ **Date:** _____
QC: _____ **Date:** _____ **SPC (Y/N):** _____ **Date:** _____

Sequence ID/ Work Center ID	Operation Description	Set Up/ Run Hours	Draw Number	Draw Rev.	Plan Code	Accept Qty	Reject Qty	Reject Number	Insp. Stamp
130 QC Quality Control	QC8- Inspect parts - second check	0.00				200	ø		
	Memo	0.00							
140 HandFinish Hand Finishing	Chemical Conversion Coat per QSI005 4.1	0.00				200	ø		
	Memo	0.00							
150 QC Quality Control	QC3- Inspect Part Finish	0.00				200			
	Memo	0.00							

Work Order ID 51427

August 24, 2009 10:42:31 AM

Item ID: D2230-1
Revision ID: G
Item Name: Lug

Accept

Setup Start
Stop

Start Date: 24/08/2009 **Start Qty:** 200.00
Required Date: 28/08/2009 **Req'd Qty:** 200.00
Reference:

Cust Item ID:
Customer:

Run Start
Stop

Approvals: **Process Plan:** _____ **Date:** _____ **Tooling:** _____ **Date:** _____
QC: _____ **Date:** _____ **SPC (Y/N):** _____ **Date:** _____

Sequence ID/ Work Center ID	Operation Description	Set Up/ Run Hours	Draw Number	Draw Rev.	Plan Code	Accept Qty	Reject Qty	Reject Number	Insp. Stamp
160	White Gloss(Ref:4.3.5.1) per QSI005 4.3-Alum	0.00							
Powdercoat	Memo	0.00							
Powder Coating	START TIME: 1:10pm OVEN TEMPERATURE: 320°F FINISH TIME: 1:40p								
170	QC3- Inspect Part Finish	0.00							
QC	Memo	0.00							
Quality Control									
180	Identify as per dwg & Stock Location: 476	0.00							
Packaging	Memo	0.00							
Packaging									

1A112260 ⇒ 09/09/01 200 0

BK 09-09-01 200

9/9/1 200X SP

Work Order ID 51427

August 24, 2009 10:42:31 AM

Item ID: D2230-1
Revision ID: G
Item Name: Lug

Accept

Setup Start
Stop

Start Date: 24/08/2009 **Start Qty:** 200.00
Required Date: 28/08/2009 **Req'd Qty:** 200.00
Reference:

Cust Item ID:
Customer:

Run Start
Stop

Approvals: **Process Plan:** _____ **Date:** _____ **Tooling:** _____ **Date:** _____
QC: _____ **Date:** _____ **SPC (Y/N):** _____ **Date:** _____

Sequence ID/ Work Center ID	Operation Description	Set Up/ Run Hours	Draw Number	Draw Rev.	Plan Code	Accept Qty	Reject Qty	Reject Number	Insp. Stamp
190	QC21- Final Inspection - Work Order Release	0.00							
QC	Memo	0.00					09/09/02		
Quality Control									

MF 09-09-02

Picklist Print

August 24, 2009 10:42:31 AM

Work Order ID: 51427

Parent Item: D2230-1RevG

Parent Item Name: Lug

Comments:

Start Date: 24/08/2009 **Required Date:** 28/08/2009

Start Qty: 200.00 **Required Qty:** 200.00

Component Item ID/ Item Name	Replacement Item ID	Mfg/ Purch	Bin Item	Primary Location	Last Location	Route Seq ID	Unit of Measure	Qty on Hand	Remaining Qty To Pick	Qty Issued	Date Issued	Status
D2230-1PRevF LUG		Purchased	No			100	Each	0.0000	200.0000			
D2423RevB1 Lug Extrusion		Manufactured	No			110	f	724.9297	14.3789			

Warehouse Location	Loc Qty	Loc Code	
Main Warehouse			
ST	724.92968		
43722	213.01468		
44529	22.39		
45800	489.525	MJT 08/08/26	14.35

DART AEROSPACE LTD	Work Order:	
Description: Mounting Lug	Part Number:	D2230-1
Inspection Dwg: D2230 **Rev:** F		Page 1 of 1

FIRST ARTICLE INSPECTION CHECKLIST

[X] First Article [ ] Prototype

Drawing Dimension	Tolerance	Actual Dimension	Accept	Reject	Method of Inspection	Comments
4.450	+/-0.010	4.451	✓			
0.306	+/-0.010	.302	✓			
0.345	+/-0.010	.351	✓			
0.400	+/-0.010	.400	✓			
0.250	+/-0.010	.253	✓			
3.700	+/-0.010	3.699	✓			
0.750	+/-0.010	.742	✓			
Ø0.257	+0.005/-0.000	.258	✓			
1.91	+/-0.010	1.910	✓			
R1.200	+/-0.010	1.192	✓			
0.375	+/-0.010	.375	✓			

Measured by:	JL
Date:	09/08/24

Audited by:	[illegible]
Date:	09/08/31

Prototype Approval:	N/A
Date:	

Rev	Date	Change	Revised by	Approved
A	03.11.11	New Issue	KJ/RF	RF

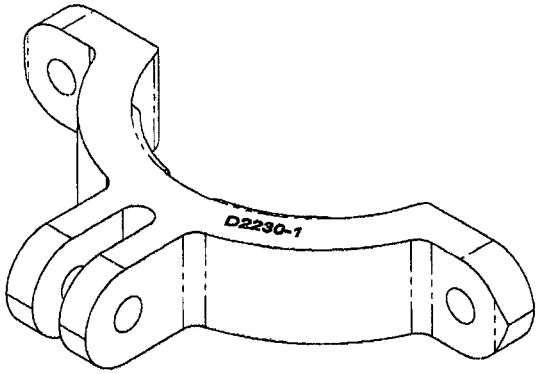

D2230-1 MOUNTING LUG

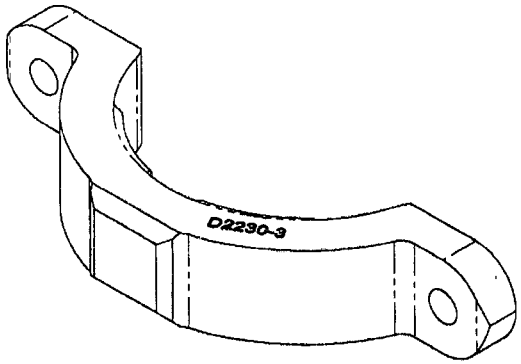

D2230-3 MOUNTING LUG

RELEASED 09/06/15 MP

51427

REV.	DESCRIPTION	BY	DATE
G	REDRAWN IN SOLIDWORKS TO CURRENT DESIGN STANDARDS. REFER TO SECTION A-A & B-B FILLET ADDED TO PREVENT CHAFING OF RUBBER CUSHION ON INSTALLATION.	AJS	09.01.16
F	REDESIGN; R1.200 WAS 1.100	CP	99.12.13
E	RE-DESIGN	BW	95.01.04
D	RE-DESIGN	BW	95.01.04
C	RE-DESIGN	BW	94.03.30

DESIGN	BW	**DART AEROSPACE LTD** HAWKESBURY, ONTARIO, CANADA
DRAWN	AJS	
CHECKED		DRAWING NO. D2230 — REV. G — SHEET 1 OF 3
MFG. APPR.		
APPROVED		TITLE MOUNTING LUG — SCALE NTS
DE APPR.		
DATE	09.01.16	

G

NOTES:
1) MATERIAL: MAKE FROM D2423 EXTRUSION
2) FINISH: CHEMICAL CONVERSION COAT PER DART QSI 005 4.1
   POWDER COAT WHITE (4.3.5.1) PER DART QSI 005 4.3
3) TOLERANCES: PER DART QSI 018 UNLESS OTHERWISE NOTED
4) UNITS: INCHES UNLESS OTHERWISE NOTED
5) BREAK SHARP EDGES: 0.005 TO 0.010 MAX
6) IDENTIFICATION: ENGRAVE PART NUMBER TO A DEPTH OF 0.010 ±0.005 IN THIS LOCATION, WITH TOOL TIP RADIUS OF 0.015±0.005.
7) WEIGHT: -1: 0.16 lbs
   -3: 0.14 lbs

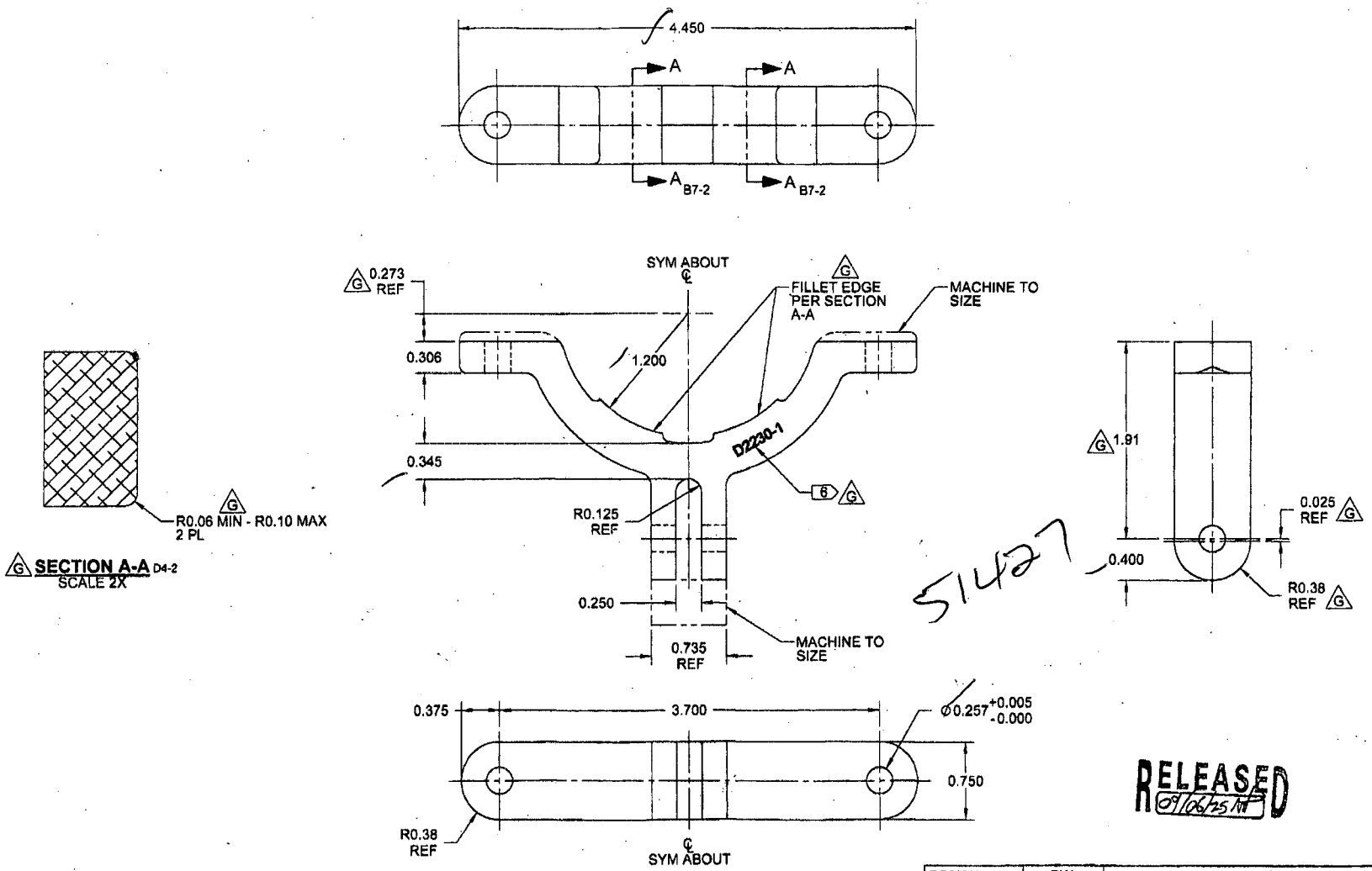

51427

RELEASED 09/06/25

D2230-1 MOUNTING LUG

DESIGN	BW	**DART AEROSPACE LTD** HAWKESBURY, ONTARIO, CANADA
DRAWN	AJS	
CHECKED		DRAWING NO. D2230 — REV. G — SHEET 2 OF 3
MFG. APPR.		
APPROVED		TITLE MOUNTING LUG — SCALE NTS
DE APPR.		
DATE	09.01.16	

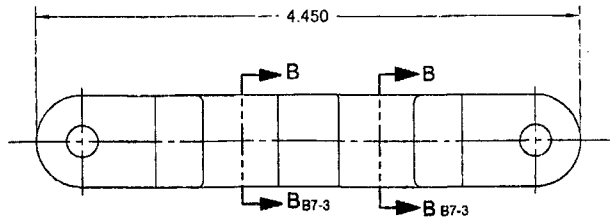

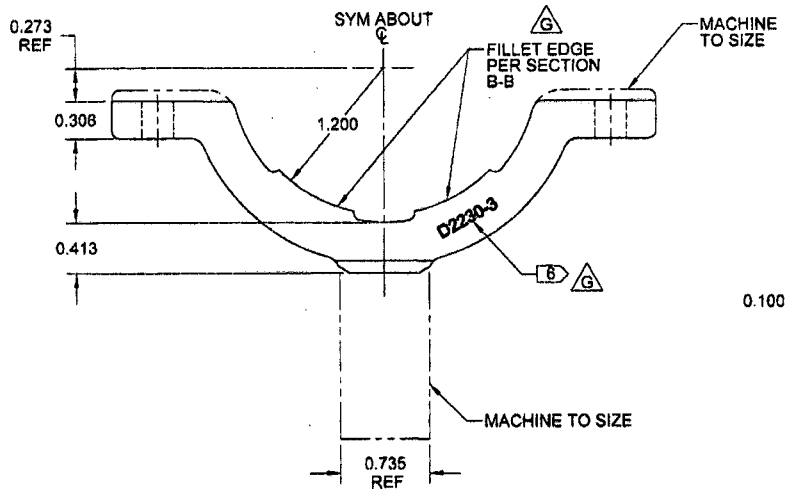

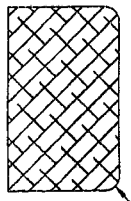

G R0.06 MIN - R0.10 MAX 2 PL

G **SECTION B-B** D4-3
SCALE 2X

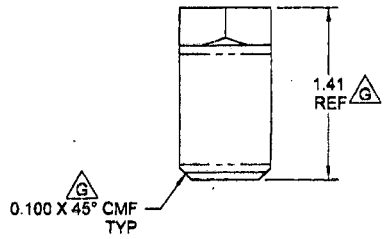

51427

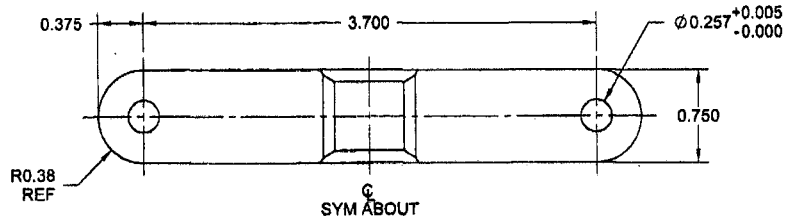

D2230-3 MOUNTING LUG

RELEASED 09/06/25

DESIGN	BW	**DART AEROSPACE LTD** HAWKESBURY, ONTARIO, CANADA
DRAWN	AJS	
CHECKED		DRAWING NO. D2230 — REV. G — SHEET 3 OF 3
MFG. APPR.		
APPROVED		TITLE MOUNTING LUG — SCALE NTS
DE APPR.		
DATE	09.01.16	